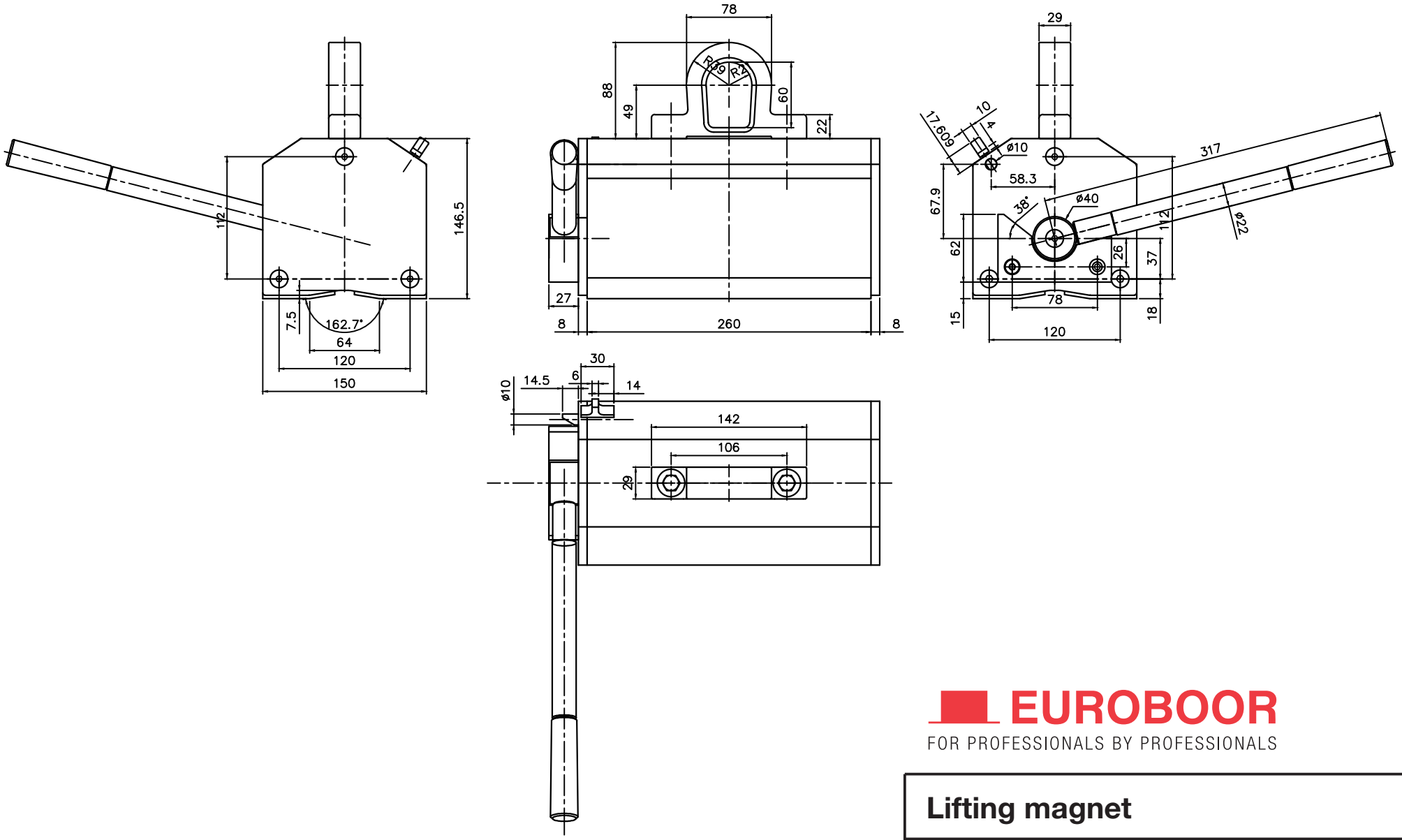

EUROBOOR

FOR PROFESSIONALS BY PROFESSIONALS

Lifting magnet

ELM.1000